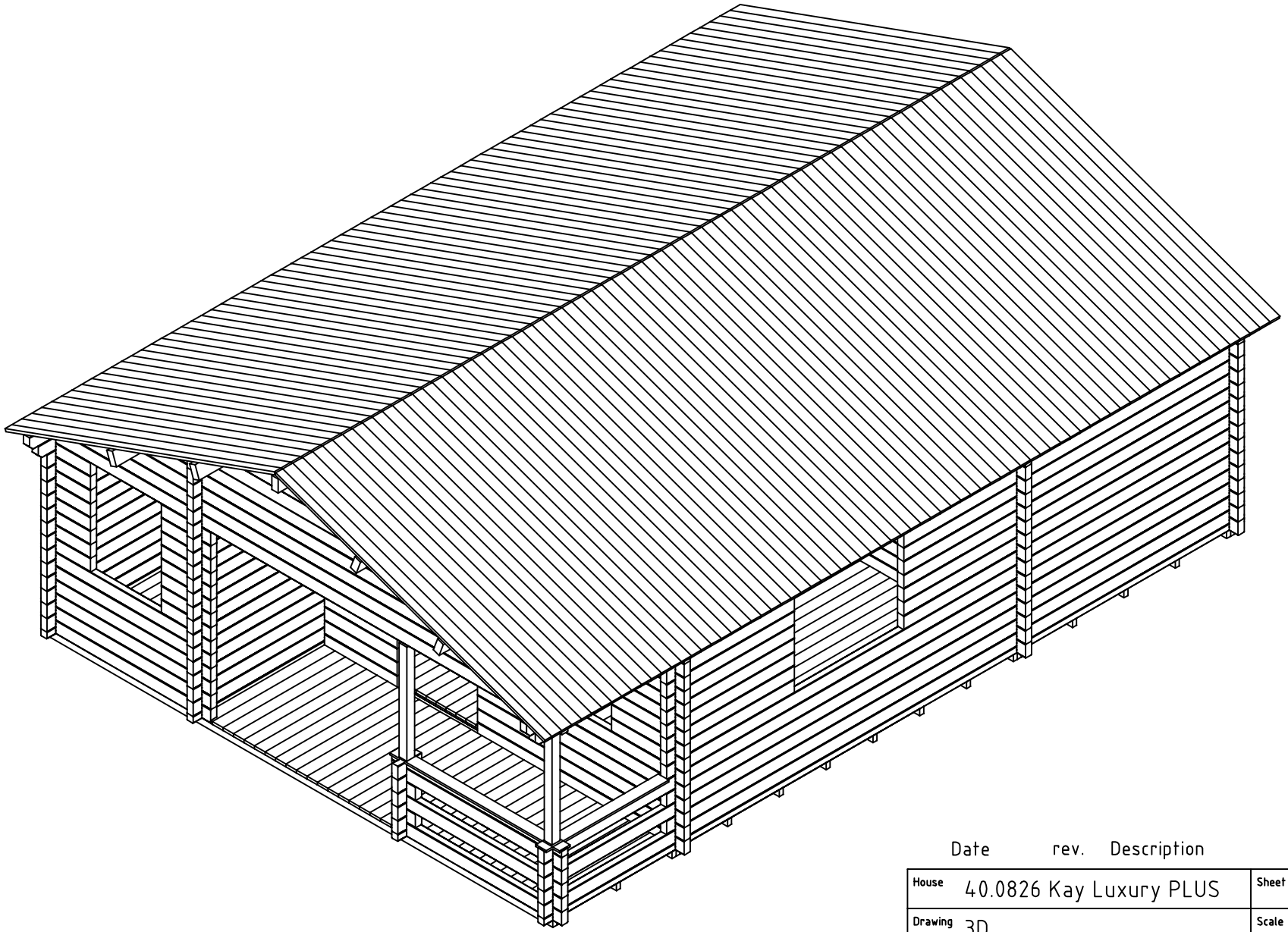

Date	rev.	Description	V 1.0

House	40.0826 Kay Luxury PLUS	Sheet	1
Drawing	3D	Scale	
Material	70x135	Date	17.10.2018
Drawer	K.K.	File	40.0826 Kay Luxury PLUS 3D.dwg

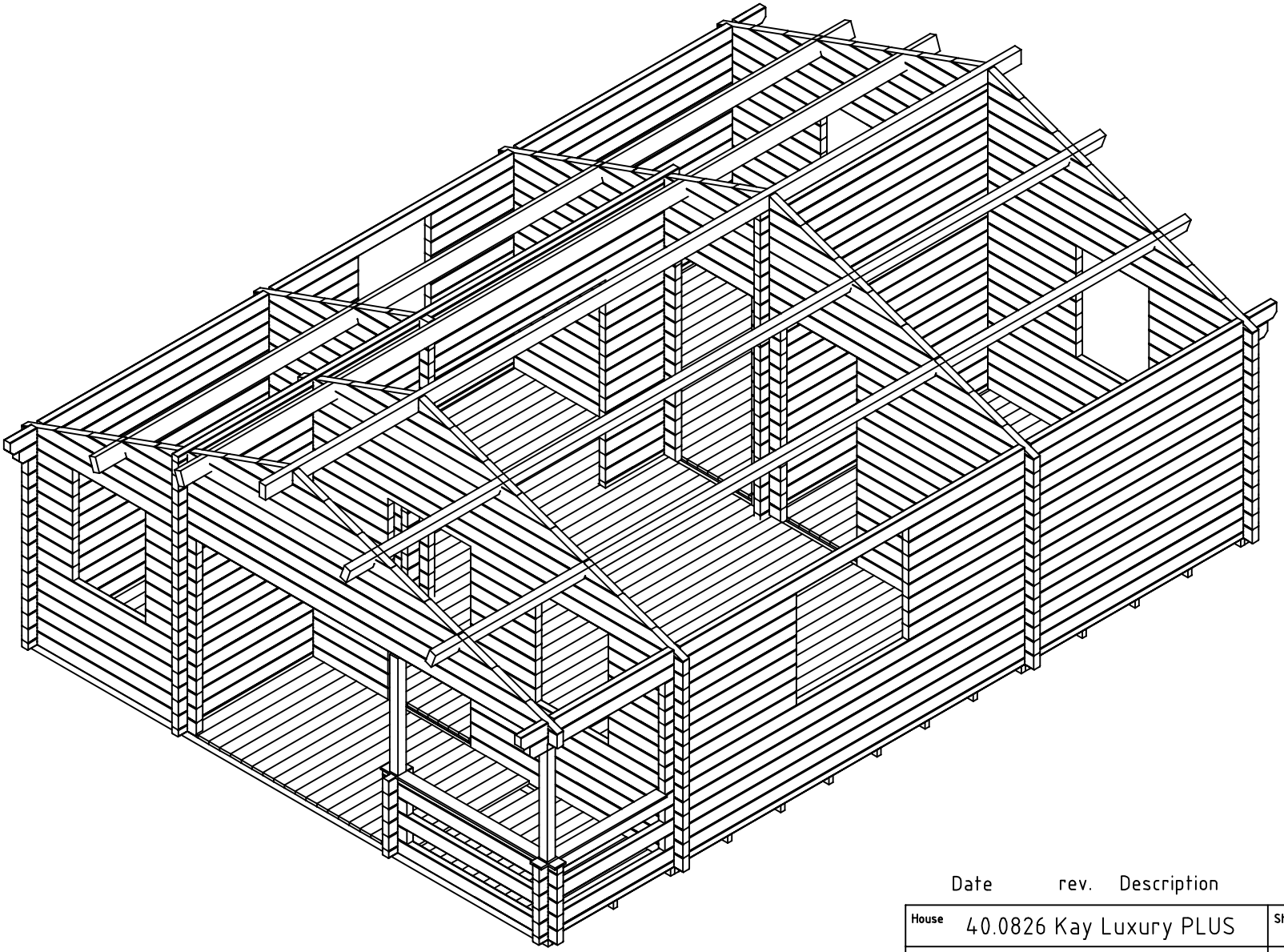

Date	rev.	Description	V 1.0

House	40.0826 Kay Luxury PLUS	Sheet	1a
Drawing	3D	Scale	
Material	70x135	Date	17.10.2018
Drawer	K.K.	File	40.0826 Kay Luxury PLUS 3D.dwg

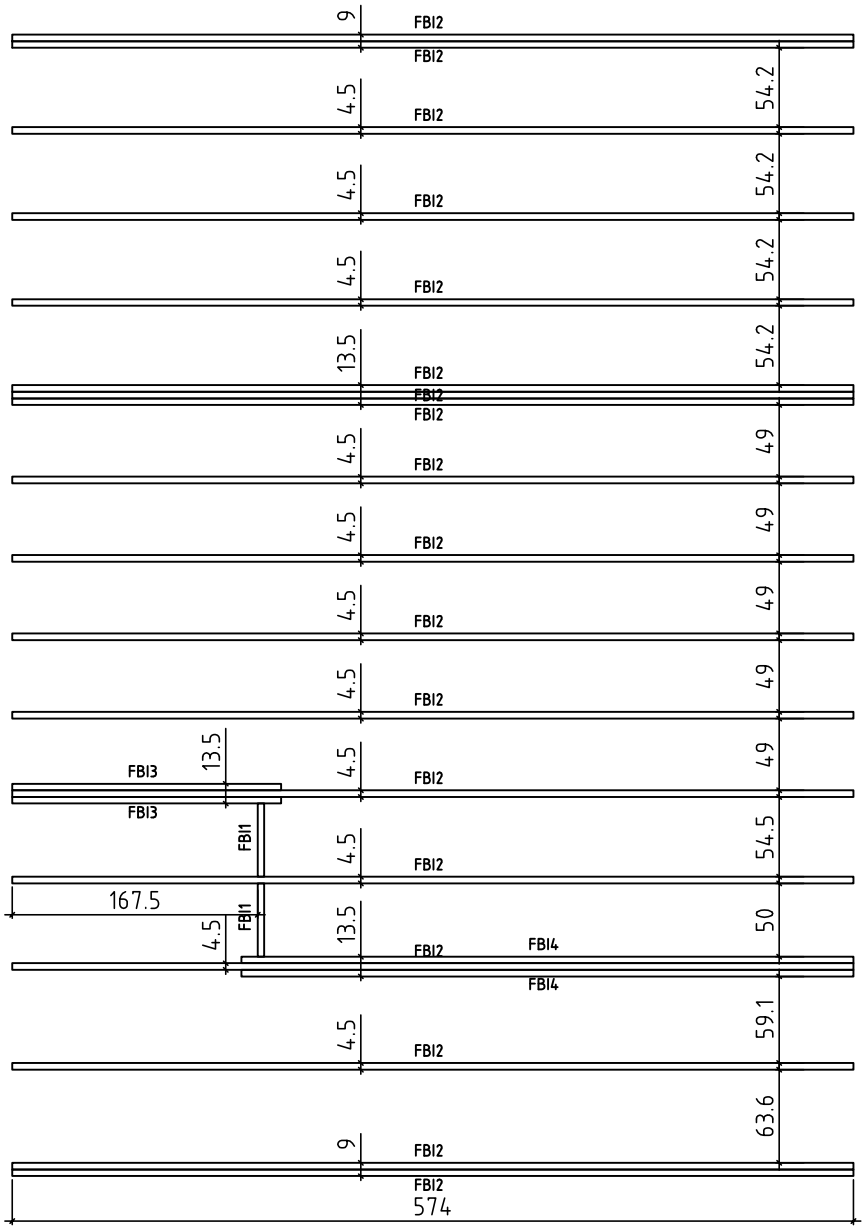

House	40.0826 Kay Luxury PLUS	Sheet	2
Drawing		Scale	1:50
Material	45x70	Date	24.11.2017
Drawer	K.K.	File	40.0826 Kay Luxury PLUS,dwg

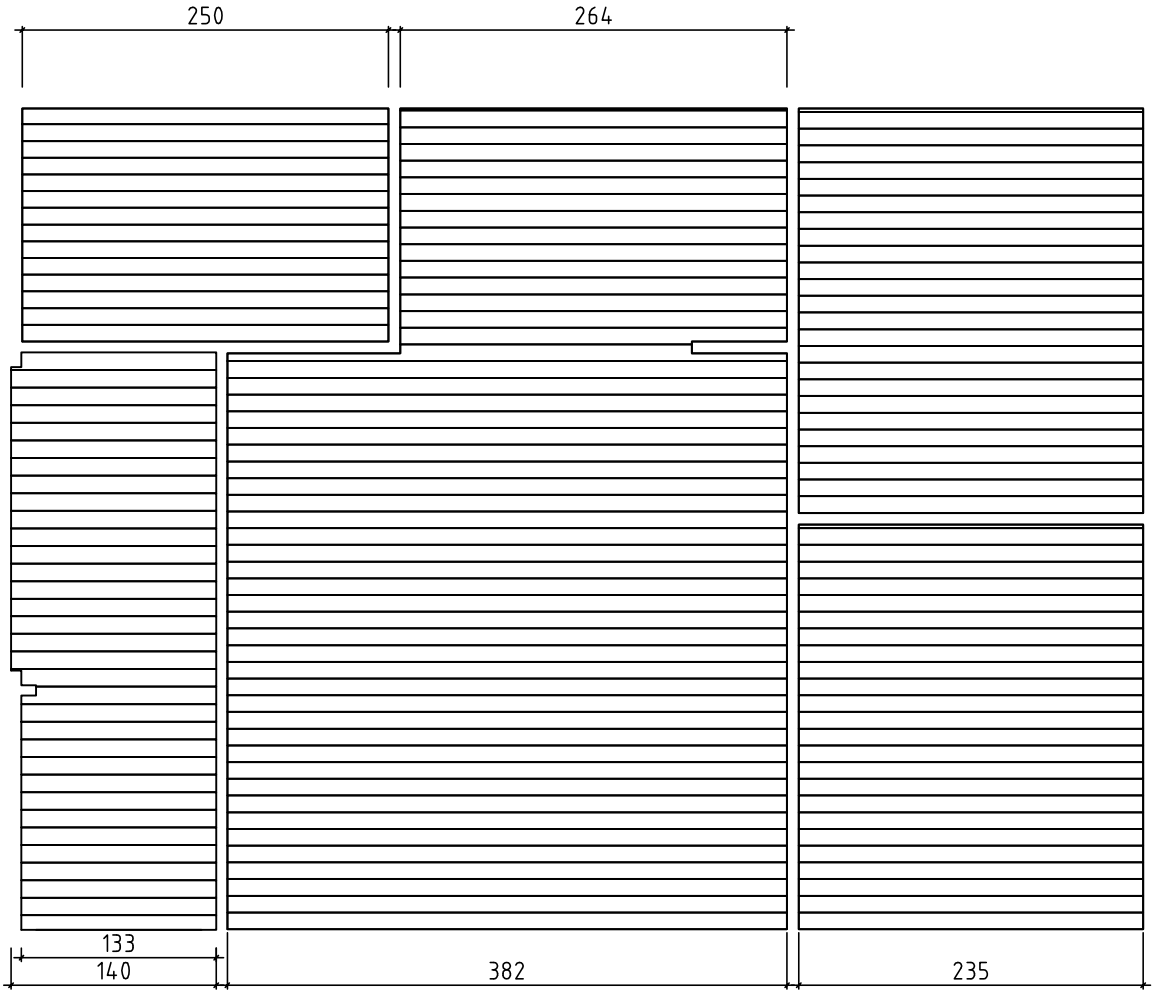

House	40.0826 Kay Luxury PLUS	Sheet	3
Drawing	Floor board	Scale	1:50
Material	114x28	Date	24.11.2017
Drawer	K.K.	File	40.0826 Kay Luxury PLUS.dwg

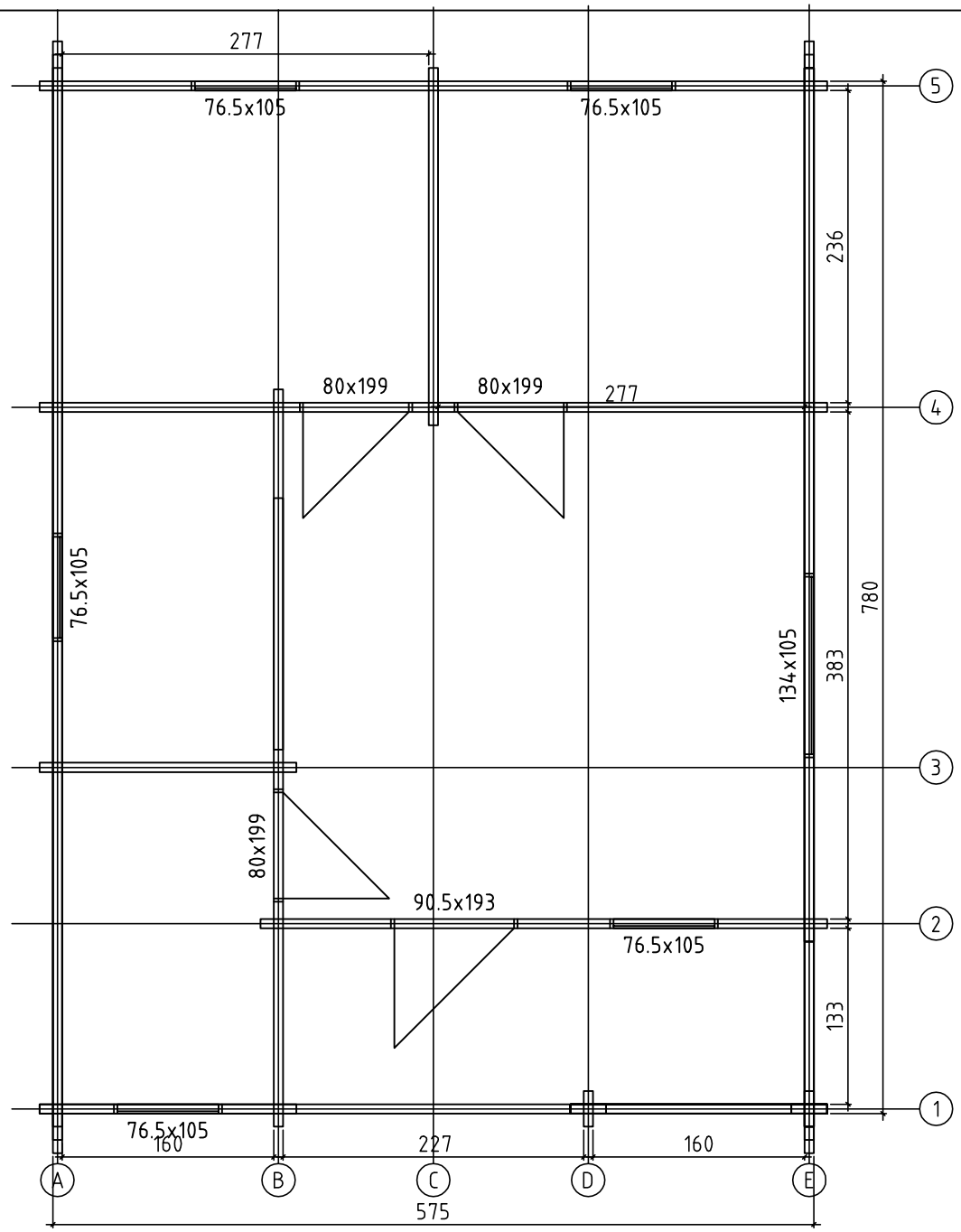

House	40.0826 Kay Luxury PLUS	Sheet	4
Drawing	Plan	Scale	1:50
Material	70x135	Date	24.11.2017
Drawer	K.K.	File	40.0826 Kay Luxury PLUS,dwg

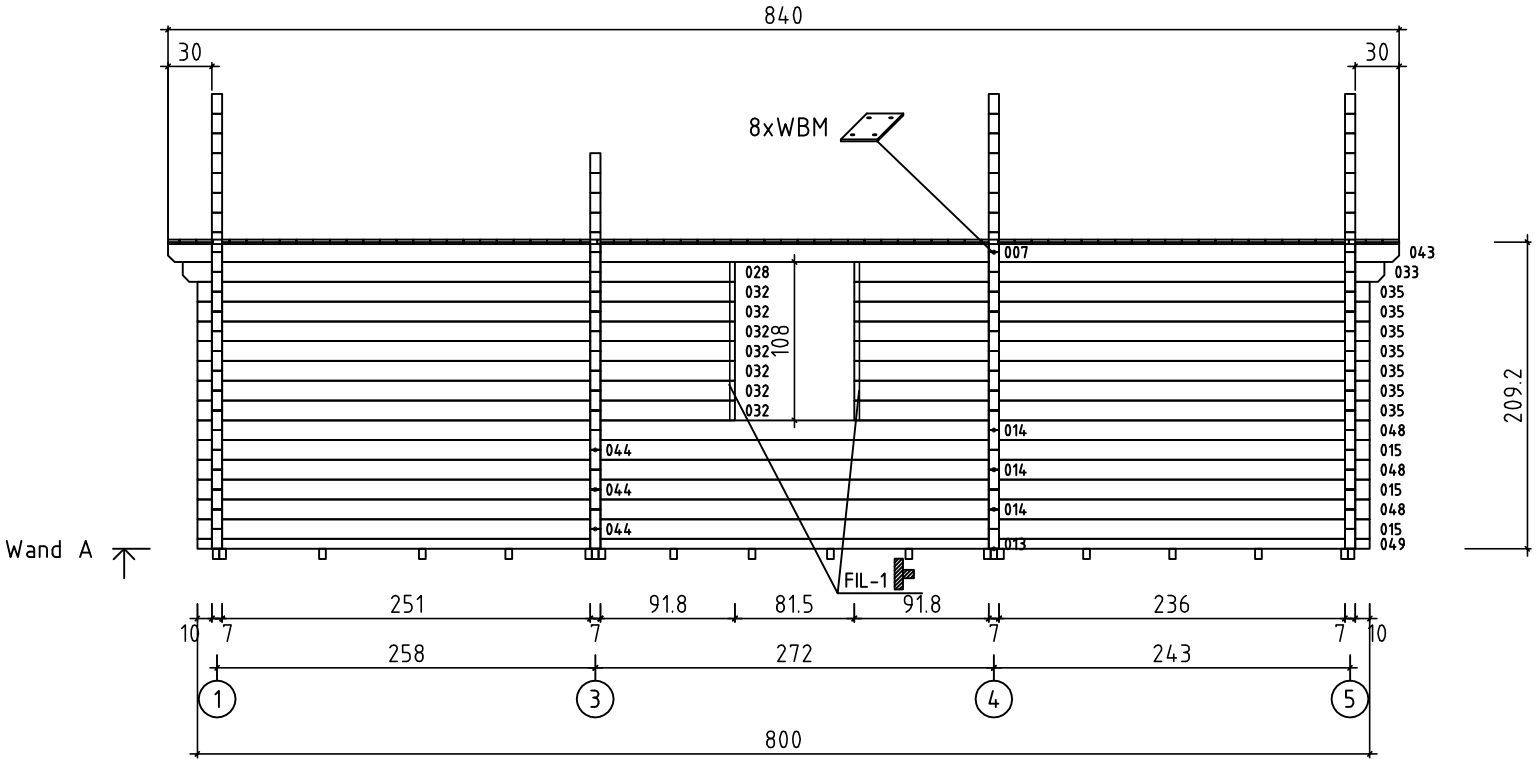

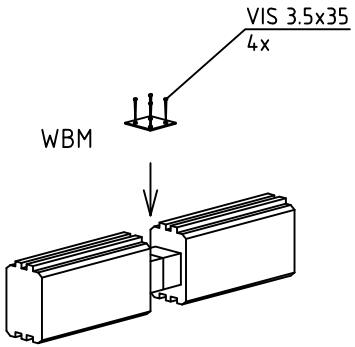

House	40.0826 Kay Luxury PLUS	Sheet	5
Drawing	WAND A	Scale	1:50
Material	7.0x13.5	Date	24.11.2017
Drawer	K.K.	File	40.0826 Kay Luxury PLUS,dwg

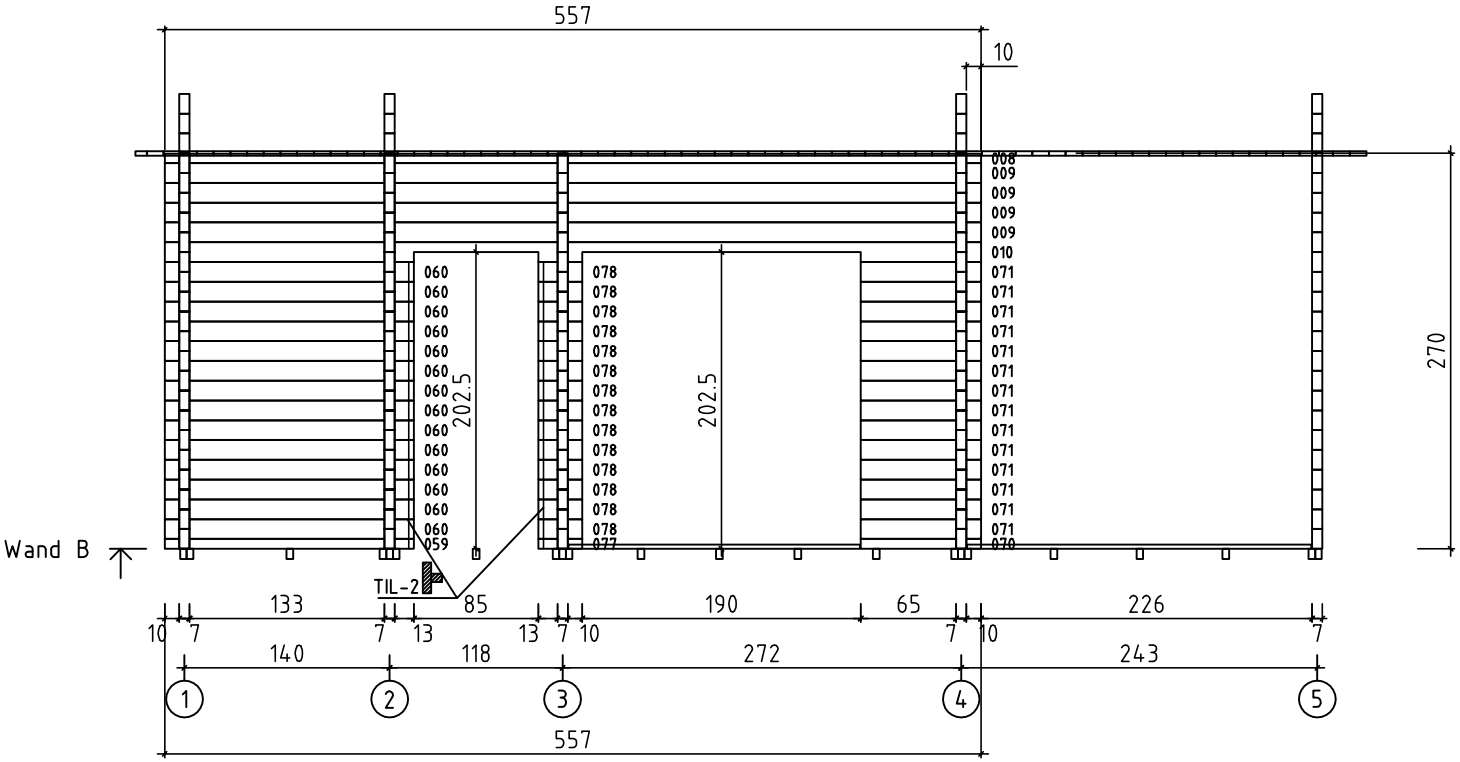

House	40.0826 Kay Luxury PLUS	Sheet	6
Drawing	WAND B	Scale	1:50
Material	7.0x13.5	Date	24.11.2017
Drawer	K.K.	File	40.0826 Kay Luxury PLUS,dwg

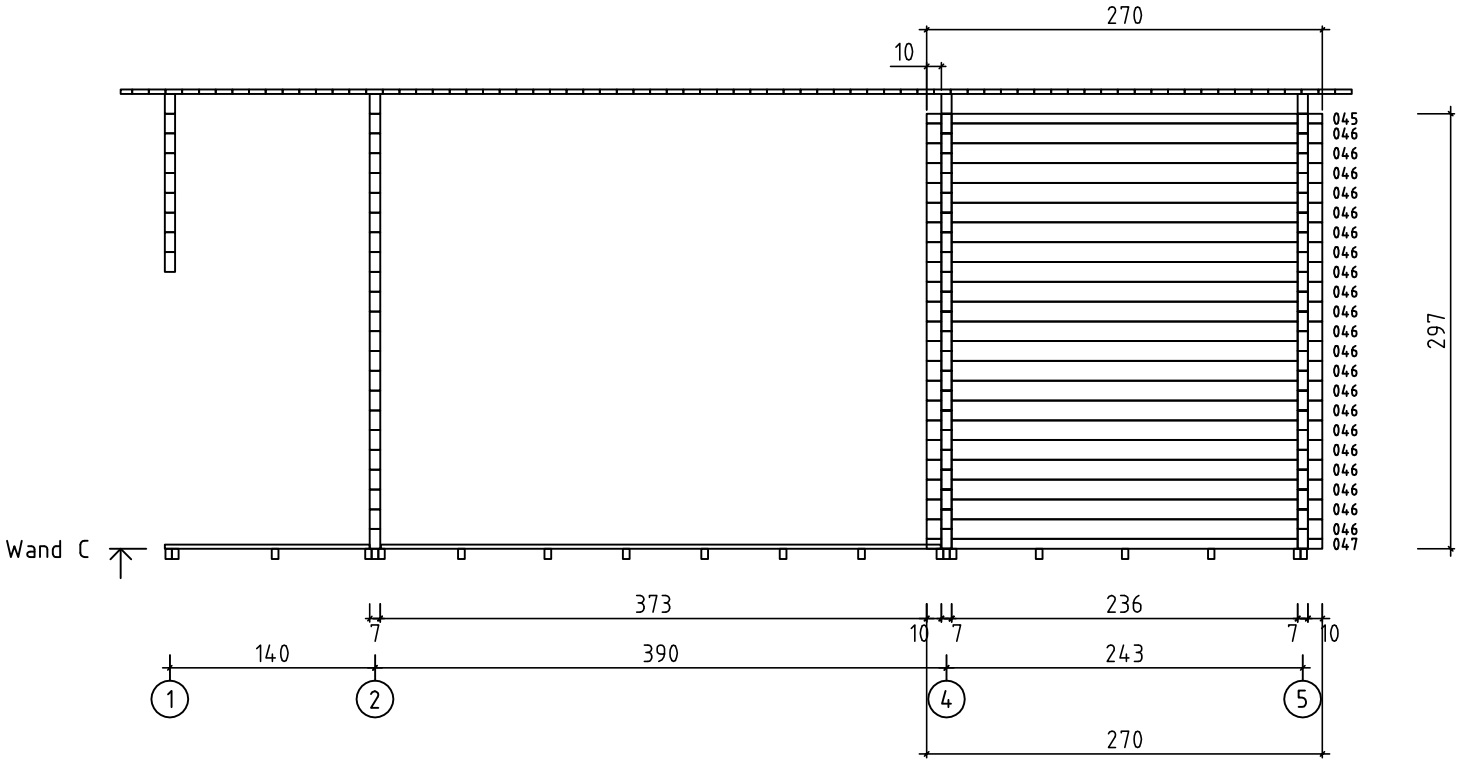

House	40.0826 Kay Luxury PLUS	Sheet	7
Drawing	WAND C	Scale	1:50
Material	7.0x13.5	Date	24.11.2017
Drawer	K.K.	File	40.0826 Kay Luxury PLUS,dwg

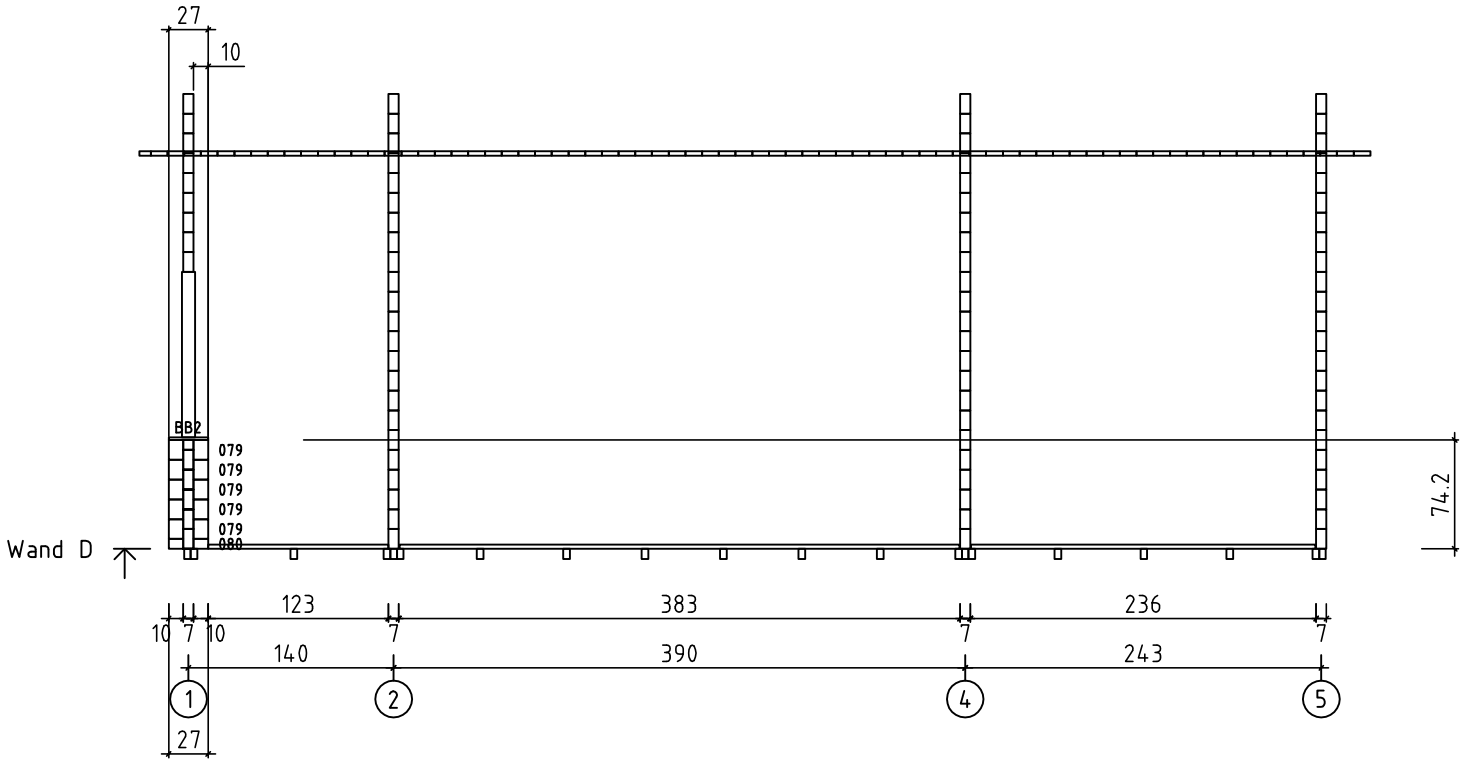

House	40.0826 Kay Luxury PLUS	Sheet	8
Drawing	WAND D	Scale	1:50
Material	7.0x13.5	Date	24.11.2017
Drawer	K.K.	File	40.0826 Kay Luxury PLUS,dwg

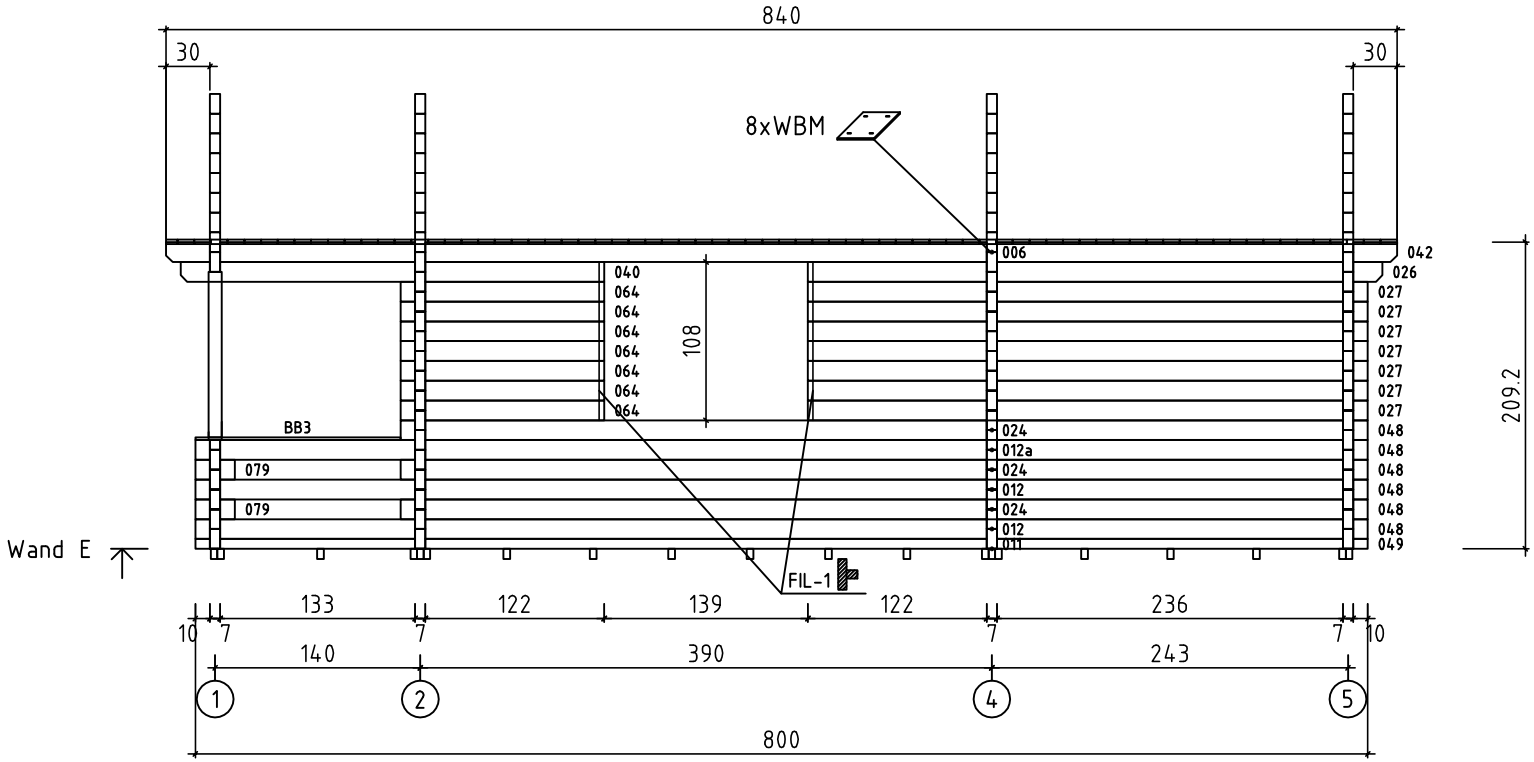

House	40.0826 Kay Luxury PLUS	Sheet	9
Drawing	WAND E	Scale	1:50
Material	7.0x13.5	Date	24.11.2017
Drawer	K.K.	File	40.0826 Kay Luxury PLUS,dwg

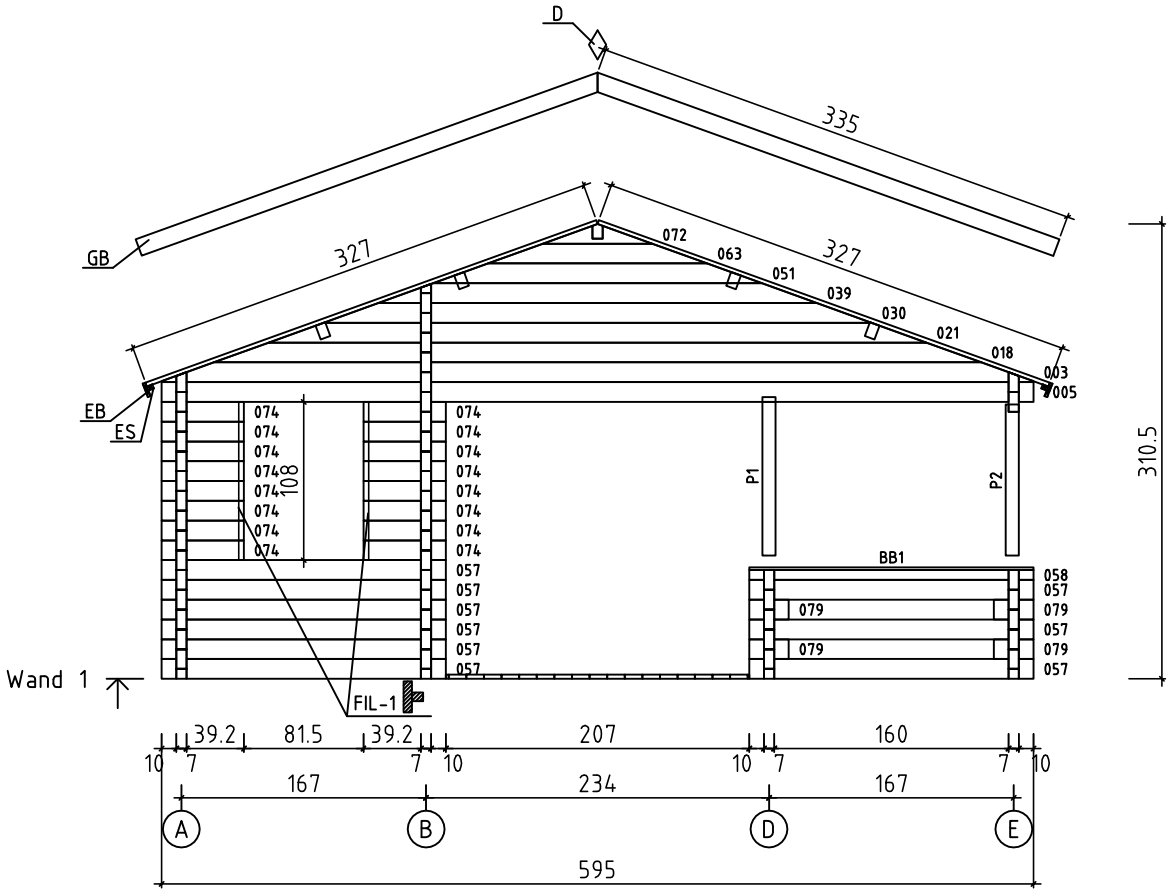

House	40.0826 Kay Luxury PLUS	Sheet	10
Drawing	WAND 1	Scale	1:50
Material	7.0x13.5	Date	24.11.2017
Drawer	K.K.	File	40.0826 Kay Luxury PLUS,dwg

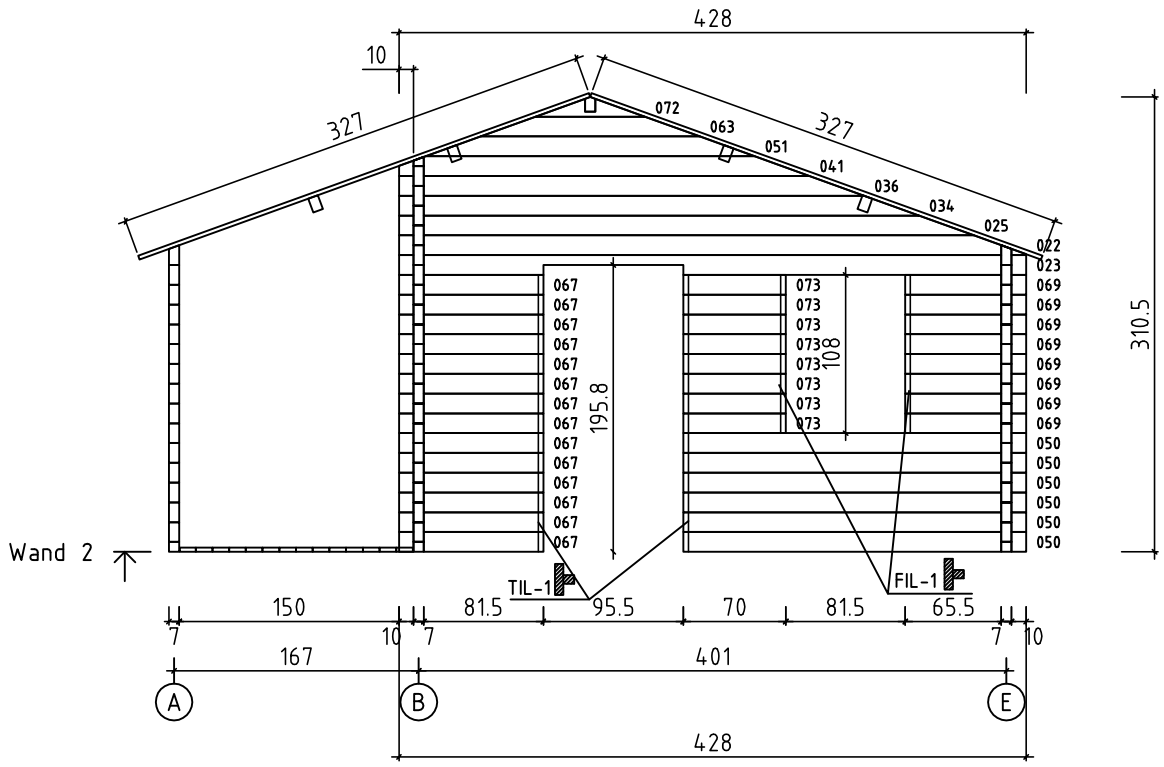

House	40.0826 Kay Luxury PLUS	Sheet	11
Drawing	WAND 2	Scale	1:50
Material	7.0x13.5	Date	24.11.2017
Drawer	K.K.	File	40.0826 Kay Luxury PLUS,dwg

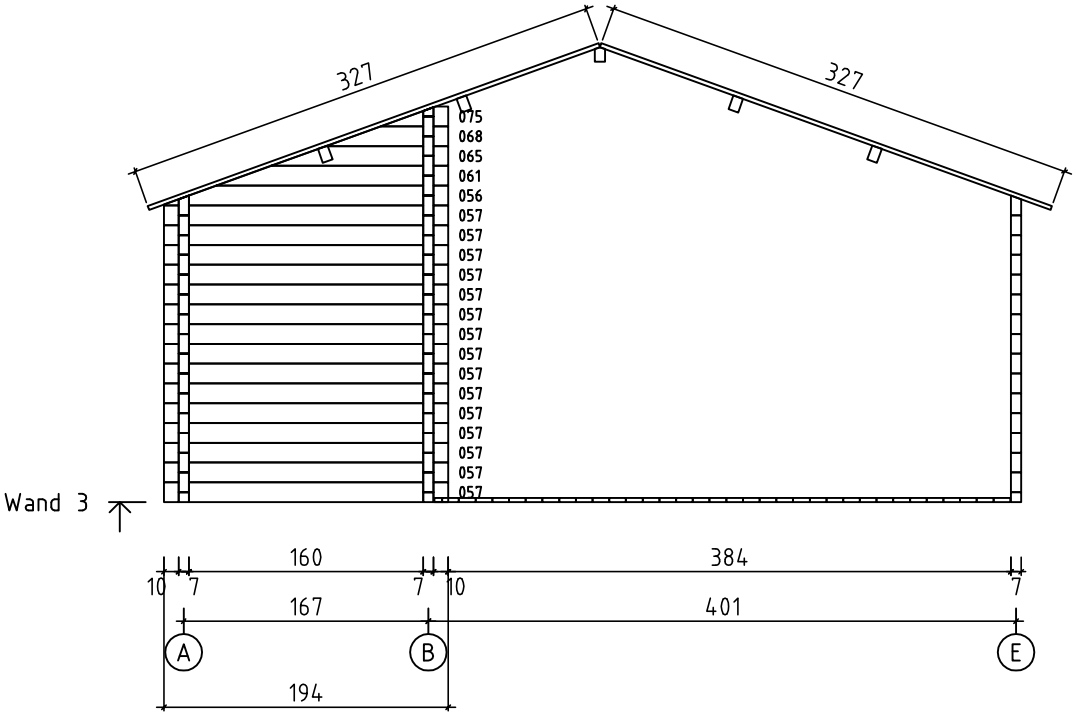

House	40.0826 Kay Luxury PLUS	Sheet	12
Drawing	WAND 3	Scale	1:50
Material	7.0x13.5	Date	24.11.2017
Drawer	K.K.	File	40.0826 Kay Luxury PLUS,dwg

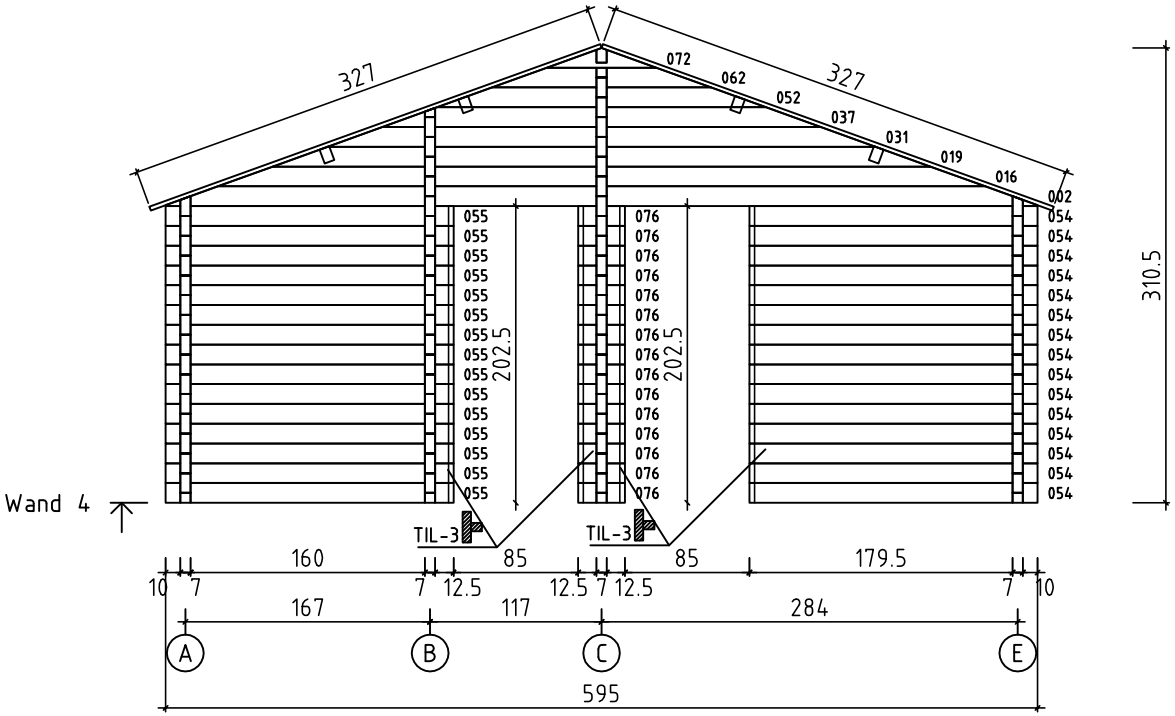

House	40.0826 Kay Luxury PLUS	Sheet	13
Drawing	WAND 4	Scale	1:50
Material	7.0x13.5	Date	24.11.2017
Drawer	K.K.	File	40.0826 Kay Luxury PLUS,dwg

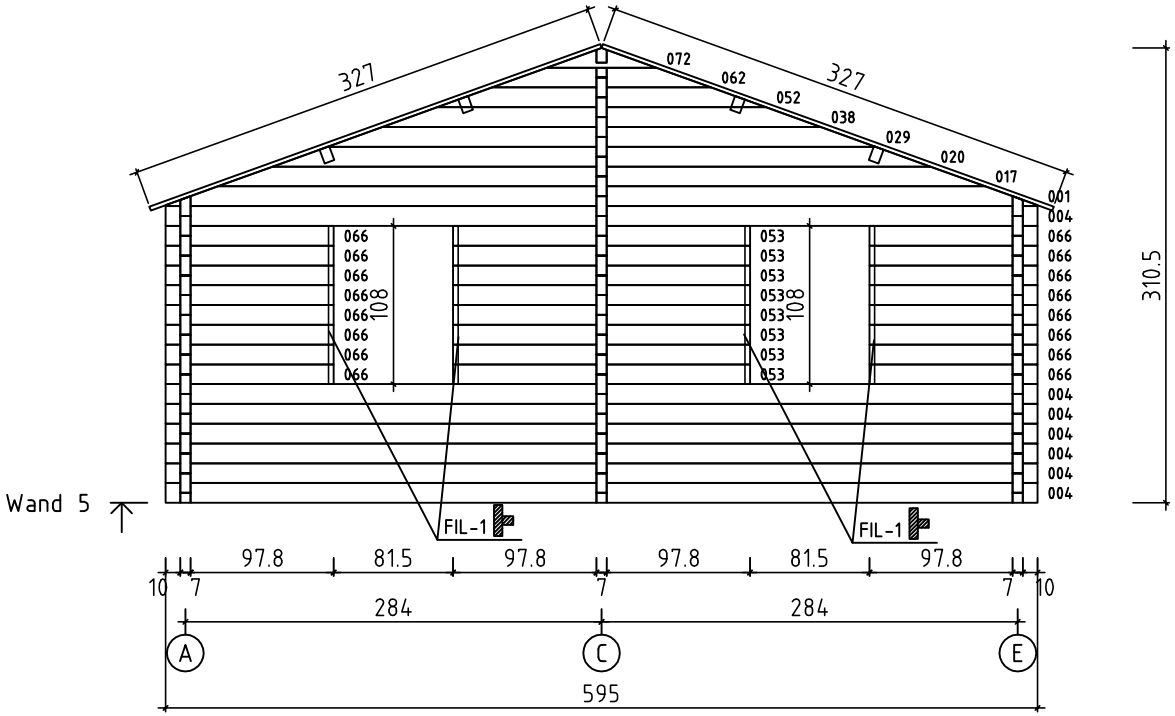

House	40.0826 Kay Luxury PLUS	Sheet	14
Drawing	WAND 5	Scale	1:50
Material	7.0x13.5	Date	24.11.2017
Drawer	K.K.	File	40.0826 Kay Luxury PLUS,dwg

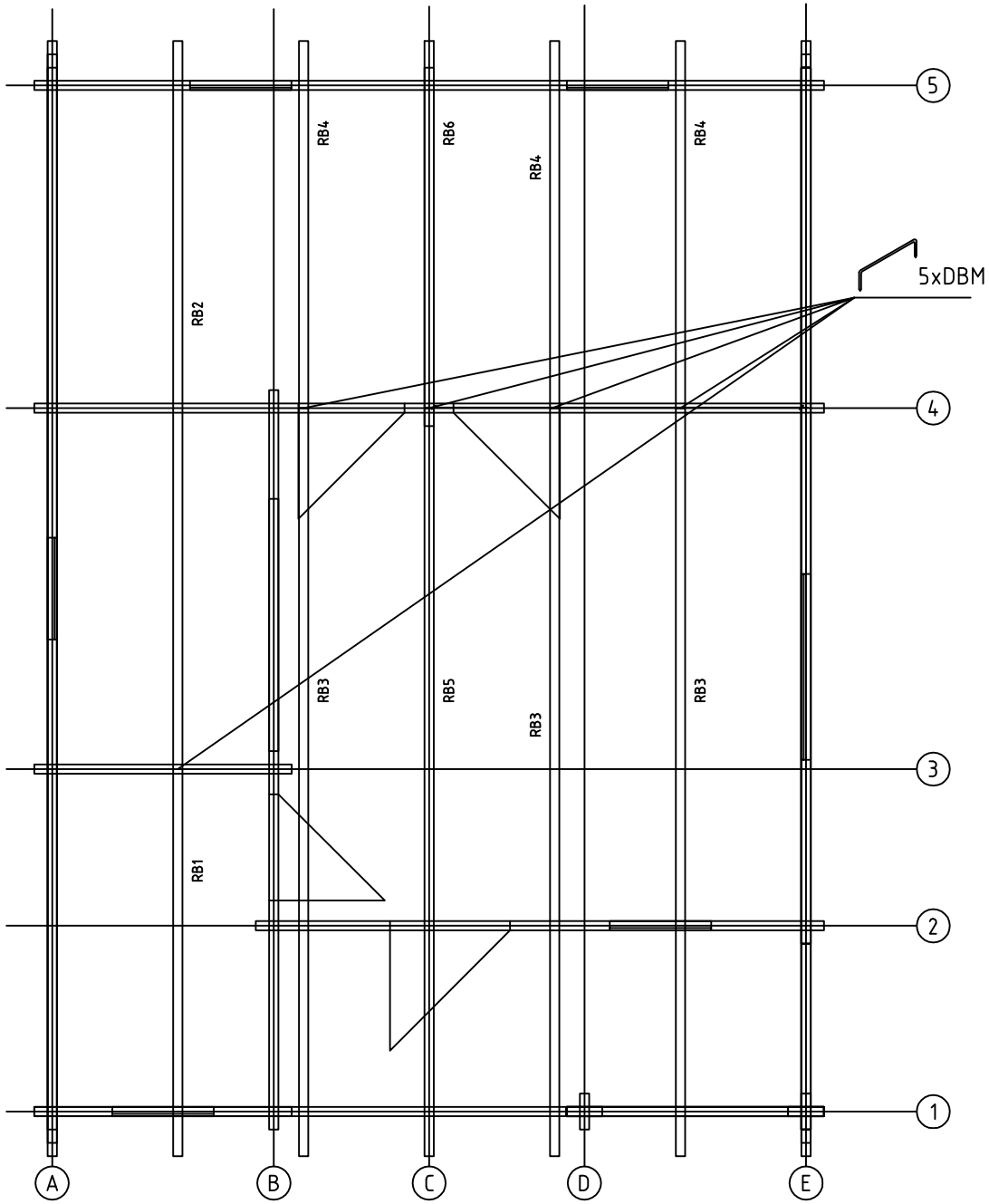

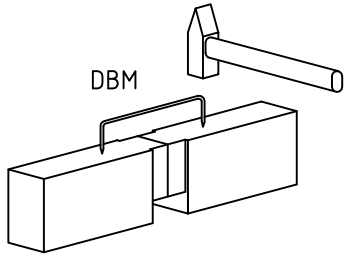

House	40.0826 Kay Luxury PLUS	Sheet	15
Drawing		Scale	1:50
Material	43x140	Date	24.11.2017
Drawer	K.K.	File	40.0826 Kay Luxury PLUS,dwg

1.PAKK 600x120x80cm 2.PAKK 600x120x80cm 3.PAKK 600x120x73cm

Pos	40.0826 Kay Luxury PLUS	Pcs.	Profil (mm)	L (mm)
001	100 2770 2770 100	1	70x135	5950
002	100 1600 1100 2770 100	1	70x135	5950
003	100 1600 3940 100	1	70x135	5950
004	100 2770 2770 100	7	70x135	5950
005	100 1600 3940 100	1	70x135	5950
006	300 1330 3830	1	70x135	5635
007	300 2510 2650	1	70x135	5635
008	100 1330 1110 2650 100	1	70x63	5570
009	100 1330 1110 2650 100	4	70x135	5570
010	100 1330 1110 2650 100	1	70x135	5570
011	100 1330 3830	1	70x68	5435
012 012a	100 1330 3830	2 1	70x135	5435
013	100 2510 2650	1	70x68	5435
014	100 2510 2650	3	70x135	5435
015	100 2360 2650	3	70x135	5285
016	1413 1100 2583	1	70x135	5236
017	2583 2583	1	70x135	5236
018	1413 3753	1	70x135	5236
019	1039 1100 2209	1	70x135	4488
020	2209 2209	1	70x135	4488
021	1039 3379	1	70x135	4488
022	100 3940 100	1	70x135	4280
023	100 3940 100	1	70x135	4280
024	100 3830	3	70x135	4035
025	100 3753	1	70x135	3923

Kood	40.0826 Kay Luxury PLUS	Materjal		File	40.0826 Kay Luxury PLUS.dwg	Leht	16

1.PAKK 600x120x80cm 2.PAKK 600x120x80cm 3.PAKK 600x120x73cm

Pos	40.0826 Kay Luxury PLUS	Pcs.	Profil (mm)	L (mm)
026	1220 2360 200	1	70x135	3920
027	1220 2360 100	7	70x135	3820
028	200 2510 918	1	70x135	3768
029	1835 1835	1	70x135	3740
030	665 3005	1	70x135	3740
031	665 1100 1835	1	70x135	3740
032	100 2510 918	7	70x135	3668
033	918 2360 200	1	70x135	3618
034	100 3379	1	70x135	3549
035	918 2360 100	7	70x135	3518
036	100 3005	1	70x135	3175
037	291 1100 1461	1	70x135	2992
038	1461 1461	1	70x135	2992
039	291 2631	1	70x135	2992
040	200 1330 1220	1	70x135	2890
041	100 2631	1	70x135	2801
042	300 2360	1	70x135	2765
043	300 2360	1	70x135	2765
044	100 2510	3	70x135	2715
045	100 2360 100	1	70x68	2700
046	100 2360 100	21	70x135	2700
047	100 2360 100	1	70x68	2700
048	100 2360	9	70x135	2565
049	100 2360	2	70x68	2565
050	2170 100	6	70x135	2340

Kood	40.0826 Kay Luxury PLUS	Materjal		File	40.0826 Kay Luxury PLUS.dwg	Leht	17

1.PAKK 600x120x80cm 2.PAKK 600x120x80cm 3.PAKK 600x120x73cm

Pos	40.0826 Kay Luxury PLUS	Pcs.	Profil (mm)	L (mm)
051		2	70x135	2244
052	1087 1087	2	70x135	2244
053	978 977	8	70x135	2025
054	1795 100	15	70x135	1965
055	100 1600 125	15	70x135	1965
056	100 1600 100	1	70x135	1940
057	100 1600 100	24	70x135	1940
058	100 1600 100	1	70x68	1940
059	100 1330 130	1	70x68	1700
060	100 1330 130	14	70x135	1700
061	1413 100	1	70x135	1583
062	713 713	2	70x135	1496
063		2	70x135	1496
064	100 1220	7	70x135	1390
065	1039 100	1	70x135	1209
066	100 977	16	70x135	1147
067	100 815	14	70x135	985
068	665 100	1	70x135	835
069	655 100	8	70x135	825
070	650 100	1	70x68	820
071	650 100	14	70x135	820
072	339 339	4	70x122	748
073		8	70x135	700
074	393 100	16	70x135	563
075	291 100	1	70x135	461

Kood	40.0826 Kay Luxury PLUS	Materjal	File	40.0826 Kay Luxury PLUS.dwg	Leht	18

1.PAKK 600x120x80cm 2.PAKK 600x120x80cm 3.PAKK 600x120x73cm

Pos	40.0826 Kay Luxury PLUS	Pcs.	Profil (mm)	L (mm)
076	125 125	15	70x135	320
077	130 100	1	70x68	300
078	130 100	14	70x135	300
079	100 100	11	70x135	270
080	100 100	1	70x68	270
SB	SPARE BEAM-ERSATZBOHLE-MADRIER DE RESERVE	1	70x135	5950
SH	HIT BLOCK-SCHLAGHÖLZER-MADRIERS D´ASSEMBLAGE	2	70x135	300
W1-1	1067; 072 063 051 039 030 021 018 003; 5950	1	70x1067	5950
W2-1	1067; 072 063 051 041 036 034 025 022; 4280	1	70x1067	4280
W3-1	675; 075 068 065 061 056; 1940	1	70x675	1940
W4-1	1067; 072 062 052 037 031 019 016 002; 5950	1	70x1067	5950
W5-1	1067; 072 062 052 038 029 020 017 001; 5950	1	70x1067	5950
FBI2	FLOORBEAMS-FUSSBODENBALKEN-Solives de plancher (IMPREGNATED-IMPREGNIERT-imprégnés) IMM	18	45x70	5740
FBI4	FLOORBEAMS-FUSSBODENBALKEN-Solives de plancher (IMPREGNATED-IMPREGNIERT-imprégnés) IMM	2	45x70	4175
FBI3	FLOORBEAMS-FUSSBODENBALKEN-Solives de plancher (IMPREGNATED-IMPREGNIERT-imprégnés) IMM	2	45x70	1835
FBI1	FLOORBEAMS-FUSSBODENBALKEN-Solives de plancher (IMPREGNATED-IMPREGNIERT-imprégnés) IMM	2	45x70	500

Kood	40.0826 Kay Luxury PLUS	Materjal	File	40.0826 Kay Luxury PLUS.dwg	Leht	19

1.PAKK 600x120x80cm 2.PAKK 600x120x80cm 3.PAKK 600x120x73cm

Pos	40.0826 Kay Luxury PLUS	Pcs.	Profil (mm)	L (mm)
P1 P2	POST-PFOSTEN-POTEAU	1 1	90x90	1080 1030
BB1	TERRACE BORDERS-TERRASSEN BEGRÄNZUNG-Plancher de terrasse	1	18x90	1940
BB3	TERRACE BORDERS-TERRASSEN BEGRÄNZUNG-Plancher de terrasse	1	18x90	1400
BB2	TERRACE BORDERS-TERRASSEN BEGRÄNZUNG-Plancher de terrasse	1	18x90	270
RB3	ROOFBEAMS-DACHBALKEN-SOLIVES DE PLAFOND 300 1330 3830	3	70x140	5635
RB5	ROOFBEAMS-DACHBALKEN-SOLIVES DE PLAFOND 300 1330 3830	1	70x140	5635
RB2	ROOFBEAMS-DACHBALKEN-SOLIVES DE PLAFOND 2650 2360 300	1	70x140	5485
RB1	ROOFBEAMS-DACHBALKEN-SOLIVES DE PLAFOND 300 2510	1	70x140	2915
RB4	ROOFBEAMS-DACHBALKEN-SOLIVES DE PLAFOND 2360 300	3	70x140	2765
RB6	ROOFBEAMS-DACHBALKEN-SOLIVES DE PLAFOND 2360 300	1	70x140	2765
	FLOORBOARDS-FUSSBODENBRETTER-PLANCHER 88mm or-oder-ou 114mm	46+1 35+1	28x88 28x114	3820
	FLOORBOARDS-FUSSBODENBRETTER-PLANCHER 88mm or-oder-ou 114mm	20 15	28x88 28x114	2640
	FLOORBOARDS-FUSSBODENBRETTER-PLANCHER 88mm or-oder-ou 114mm	20 14	28x88 28x114	2500
	FLOORBOARDS-FUSSBODENBRETTER-PLANCHER 88mm or-oder-ou 114mm	65 50	28x88 28x114	2350
	TERRACE BORDERS-TERRASSEN BEGRÄNZUNG-Plancher de terrasse (IMPREGNATED-IMPREGNIERT-imprégnés) IMM	19+1	120x28	1400
	TERRACE BORDERS-TERRASSEN BEGRÄNZUNG-Plancher de terrasse (IMPREGNATED-IMPREGNIERT-imprégnés) IMM	14	120x28	1330
	ROOFBOARD/DACHBRETTER/KATTOLAUTA 88mm or-tai-eller 114mm	192+1 148+1	28x88 28x114	3270
	SKIRTING SLAT-FUSSBODENLEISTE-BAGUETTE		18x35	49.0
GB	GABLE BOARD-GIEBELBLENDE-PLANCHE DE RIVE 3350 3305	4	18x120	3350
EB	EAVE BOARD-TRAUFBRETT-LATTES SOUS VOLIGES	4	18x90	4200
ES	EAVE SLAT-TRAUFENLEISTE- Baguettes pour fixer les lattes sous voliges	4	30x40	4200
RFF	ROOF FELT FILLET-GIEBELLEISTE- Baguettes pour fixer les planches de rive	4	18x70	3300
D	DIAMOND-RAUTE-ELEMENT DE DECORATION	2	18x90	200
TIL-1 TIL-2 TIL-3	DOOR ASSEMBLING PROFILE-TÜR INSTALLIERUNGSPROFIL -Tasseau de fixation pour portes	2 2 4	43x70	1860 1930 1990
FIL-1	WINDOW ASSEMBLING PROFILE-FENSTER INSTALLIERUNGSPROFIL -Tasseau de fixation pour fenêtres	12	43x70	1050

Kood	40.0826 Kay Luxury PLUS	Materjal	File	40.0826 Kay Luxury PLUS.dwg	Leht	20

1.PAKK 600x120x80cm 2.PAKK 600x120x80cm 3.PAKK 600x120x73cm

Pos	40.0826 Kay Luxury PLUS	Pcs.	Profil (mm)	L (mm)
	REGULATING BOLT-REGULIERUNGSBOLZEN-Elément de fixation pour poteau	2		
	STEEL CORNER-METALLVINKEL-Equerre de renfort FOR FLOORBEAMS FÜR FUSSBODENBALKEN Solives de plancher	4	40x40	
DBM	ROOFBEAMS CONNECTING METAL-DACHBALKEN BEFESTIGUNGSMETALLE- Connecteur métallique pour solives de plafond	5		
WBM	WALL FIXING PLATE-WANDBOHLEN BEFESTIGUNGSMETALLE- PATTE D´ASSEMBLAGE	16	50	50
	SCREW-SCHRAUBEN-VIS DECORATIV, ROOF FELT FILLET LISTOILLE, KULMARAUDOILLE STEEL CORNER, SKIRTING SLAT	80	3,5x35	
	Door-Tür-Porte 905x1930 1 pcs-st-unt (left-links-Gauche) ISO			
	905 / 1930 ORT_1H_VU			
	V	1	905	1930
		1		
		1		
		1		
	Door-Tür-Porte 800x1990 (2 left-links-Gauche) (1 right-rechts-Droit)			
	800 / 1990 Ast_SU			
	2V + 1P	3	800	1990
		3		
		3		
	WINDOW-FENSTER-Fenêtre 765x1050 5 pcs-st-unt (3 right-rechts-Droit) (2 left-links-Gauche) ISO			
	765 / 1050 ORT_1H			
	2V + 3P	5	765	1050
		5		
		5		
		5		

Kood	40.0826 Kay Luxury PLUS	Materjal	File	40.0826 Kay Luxury PLUS.dwg	Leht	21

1.PAKK 600x120x80cm 2.PAKK 600x120x80cm 3.PAKK 600x120x73cm

Pos	40.0826 Kay Luxury PLUS	Pcs.	Profil (mm)	L (mm)
	WINDOW-FENSTER-Fenêtre 1340x1050 - 1 pcs-st-unt ISO			
	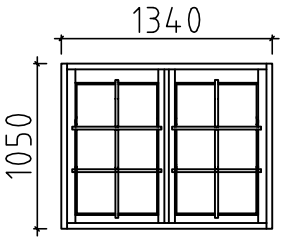 ORT_1H	1	1340	1050
	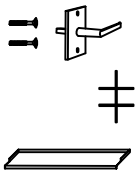	2		
		2		
		1		

Kood	40.0826 Kay Luxury PLUS	Materjal	File	40.0826 Kay Luxury PLUS.dwg	Leht	22